Super Fast Recovery Rectifier Diode

Features

- Low profile package
- Ideal for automated placement
- Glass passivated chip junction
- High frequency
- High forward surge capability
- Meets MSL level 1, per J-STD-020,LF maximum peak of 260 °C
- AEC-Q101 qualified available
- Automotive product No.: base P/N-H

Typical Application

For use in high frequency rectification of power supply, inverters, converters, and freewheeling diodes for consumer and telecommunication.

Mechanical Data

- Package: DO-214AC(SMA)
  Molding compound meets UL 94 V-0 flammability rating,RoHS-compliant
- Terminals: Tin plated leads, solderable per J-STD-002 and JESD22-B102
- Polarity: Cathode line denotes the cathode end

■ Maximum Ratings (Ta=25℃ Unless otherwise specified)

PARAMETER	Symbol	Unit	Conditions	SU14
Repetitive Peak Reverse Voltage	V_{RRM}	V		200
Average Forward Current	I_O	A	Half-sine wave, Resistance load, Ta(Fig 1)	1.0
Surge(Nonrepetitive)Forward Current	I_{FSM}	A	60HZ sine wave, 1 cycle, Ta=25℃	30
Current Squared Time	I^2t	A^2s	1ms≤t＜8.3ms Tj=25℃,Rating of per diode	3.7
Thermal Resistance	$R_{\theta J-A}$	℃/W	Between junction and case	85
Storage Temperature	T_{stg}	℃		-55 ~ +150
Junction Temperature	T_j	℃		-55 ~ +150

Electrical Characteristics（Ta=25℃ Unless otherwise specified）

PARAMETER	Symbol	Unit	Conditions		SU14
Peak Forward Voltage	V_{FM}	V	I F =1.0A		0.95
Peak Reverse Current	I_{RRM1}	μA	$V_{RM}=V_{RRM}$	Ta=25℃	5
	I_{RRM2}			Ta=125℃	200
Maximum reverse recovery time	Trr	ns	I_F=0.5A,I_R=1.0A,I_{rr}=0.25A		35

■ Characteristics (Typical)

FIG1: Forward Current Derating Curve

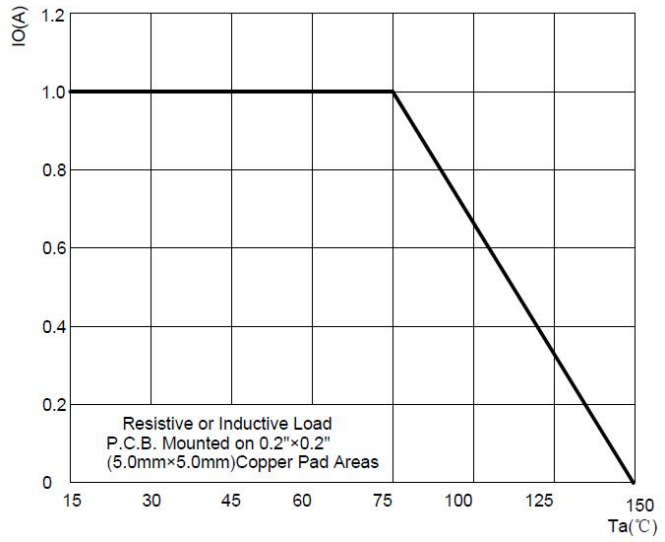

FIG2:Surge Forward Current Capability

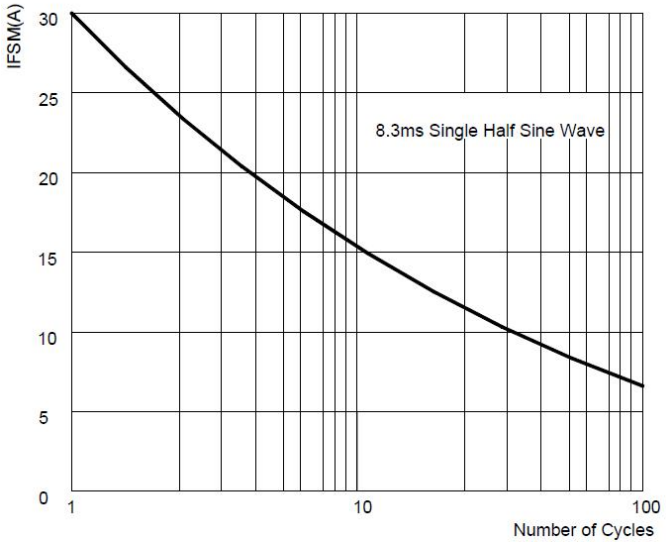

FIG3:Instantaneous Forward Voltage

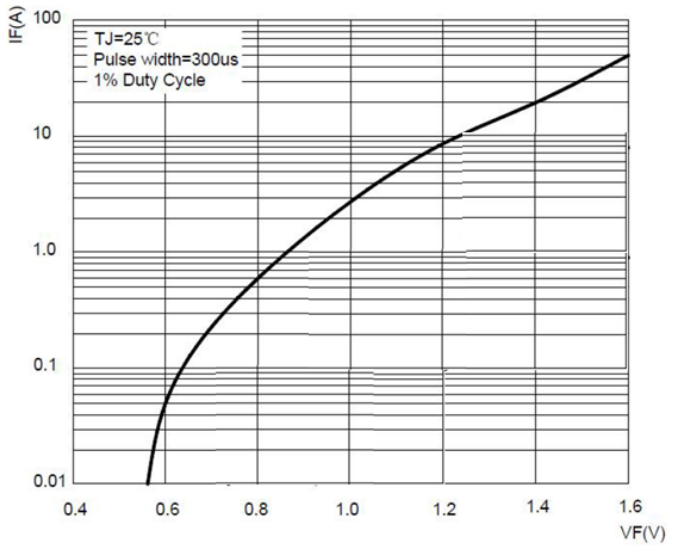

FIG4:Typical Reverse Characteristics

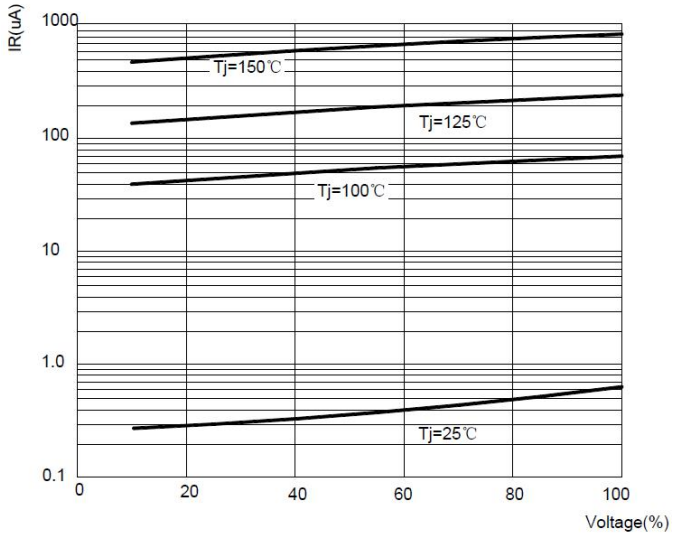

Diagram of circuit and Testing wave form of reverse recovery time

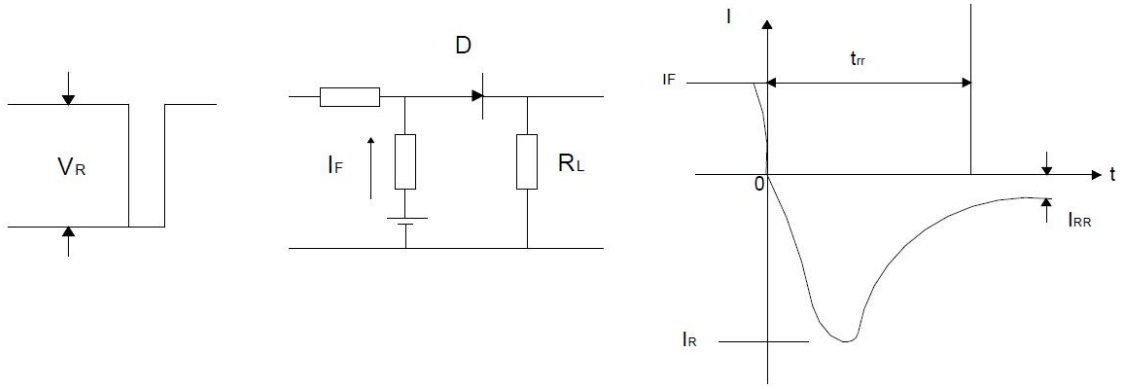

■ Ordering Information (Example)

PREFERED	PACKAGE CODE	MINIMUM PACKAGE(pcs)	INNER BOX QUANTITY(pcs)	OUTER CARTON QUANTITY(pcs)	DELIVERY MODE
SU14	DO-214AC(SMA)	5000	10000	80000	13” reel
SU14	DO-214AC(SMA)	7500	15000	120000	13” reel

■ Outline Dimensions

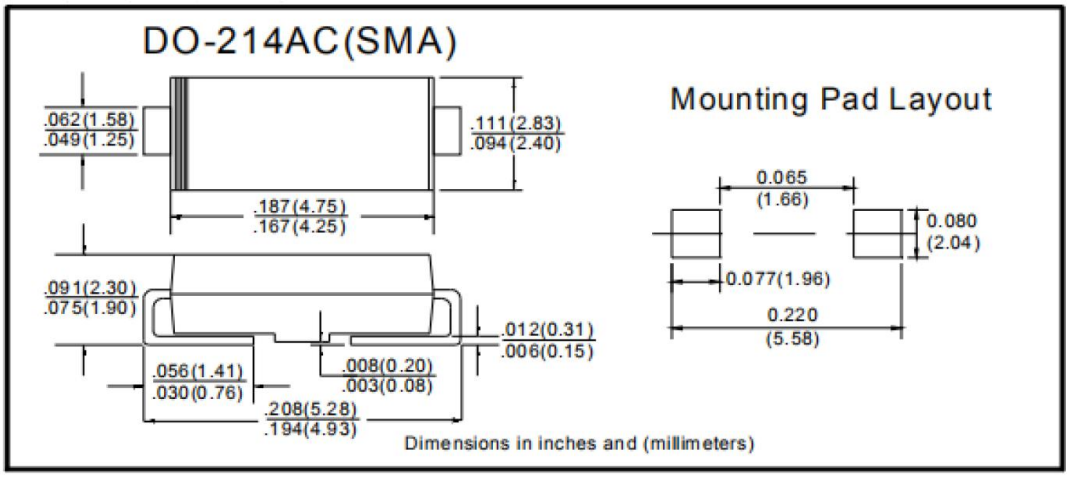

Notice

MOSPEC reserves the rights to make changes of the content herein the document anytime without notification. MOSPEC or anyone on its behalf, assumes no responsibility or liability for any errors or inaccuracies. Please refer to MOSPEC website for the last document.

MOSPEC disclaims any and all liability arising out of the application or use of any product including damages incidentally and consequentially incurred.

Application shown on the herein document are examples of standard use and operation. Customers are responsible for comprehending suitable use in particular applications. MOSPEC makes no representation or warranty that such application will be suitable for the specified use without further testing or modification.

The information contained herein is presented only as a guide for the applications of our products. No responsibility is assumed by MOSPEC for any infringements of patents or other rights of the third parties which may result from its use. No license is granted by implication or otherwise under any patent or patent rights of MOSPEC or others.

These MOSPEC products are intended for usage in general electronic equipment. Please make sure to consult with MOSPEC before you use these MOSPEC products in equipment which require specialized quality and/or reliability, and in equipment which could have major impact to the welfare of human life (atomic energy control, aeronautics , traffic control, combustion control, safety devices etc.)